Romotop® SOLID F Z

KERAMIKA
KERAMIK
CERAMIC

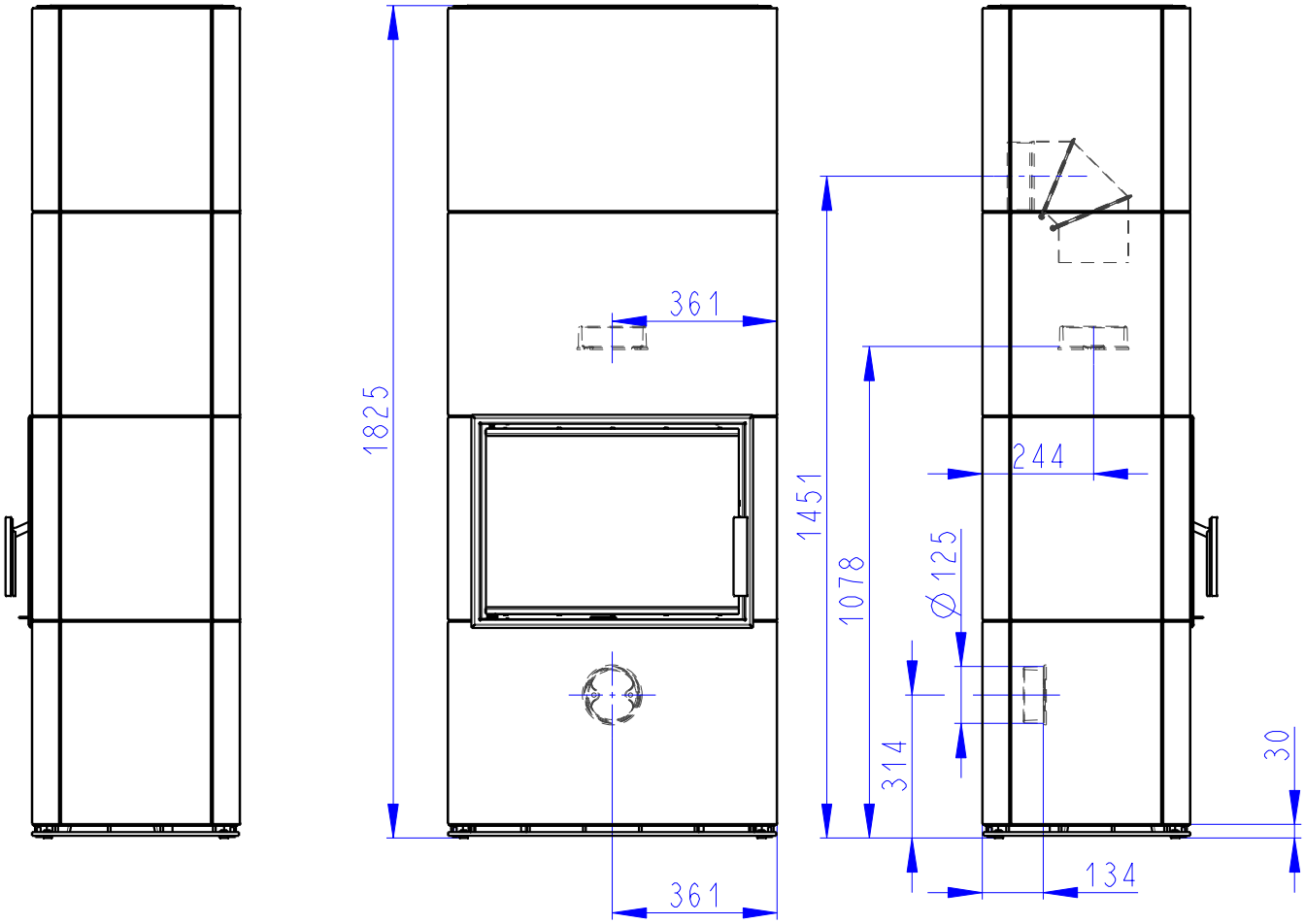

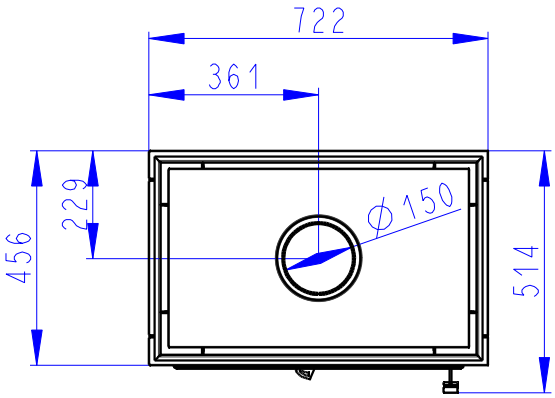

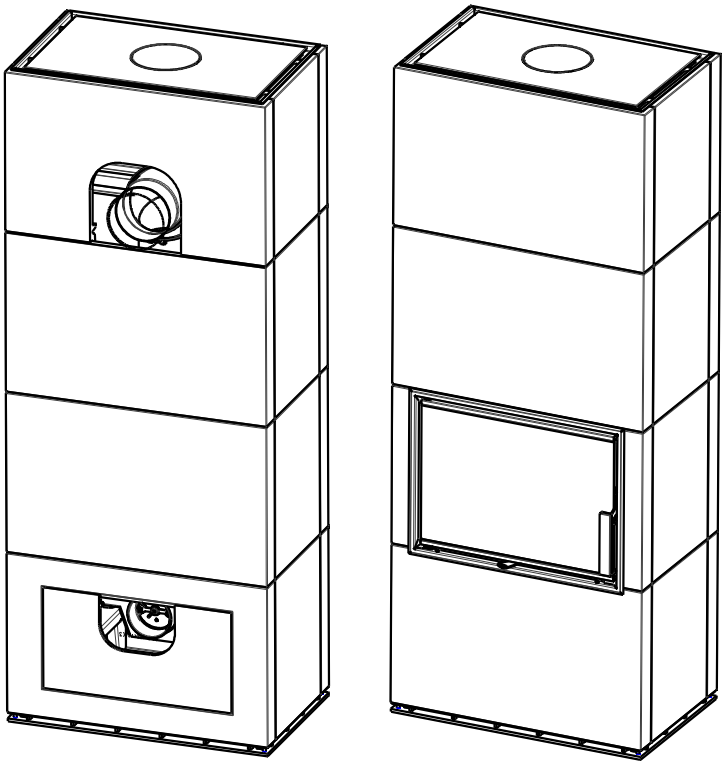

Romotop® SOLID F

KERAMIKA
KERAMIK
CERAMIC

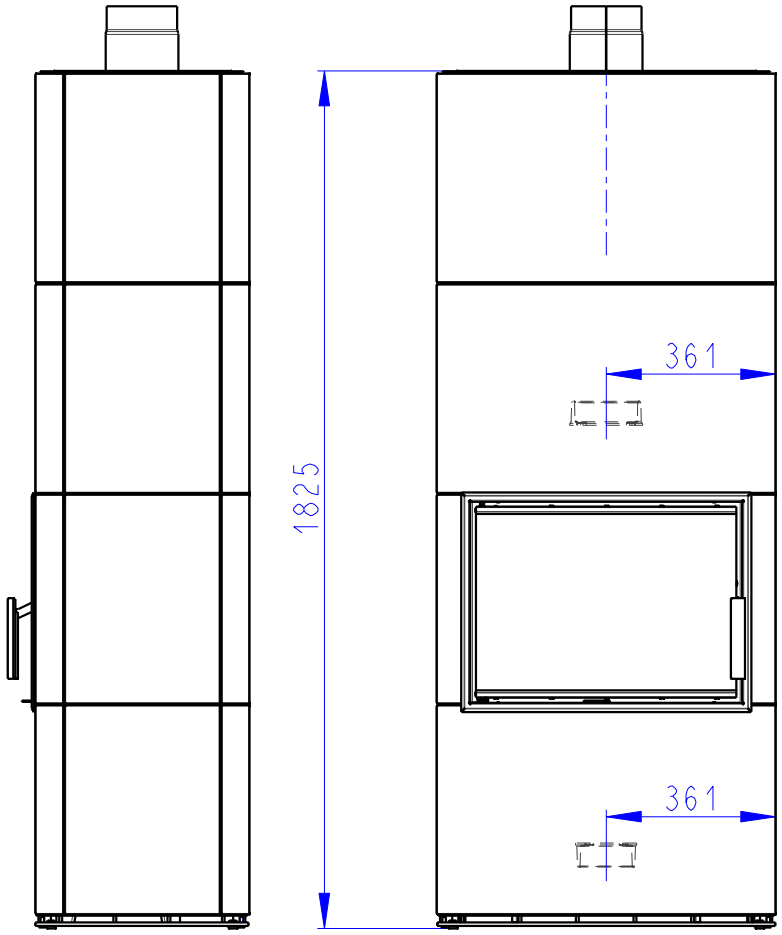

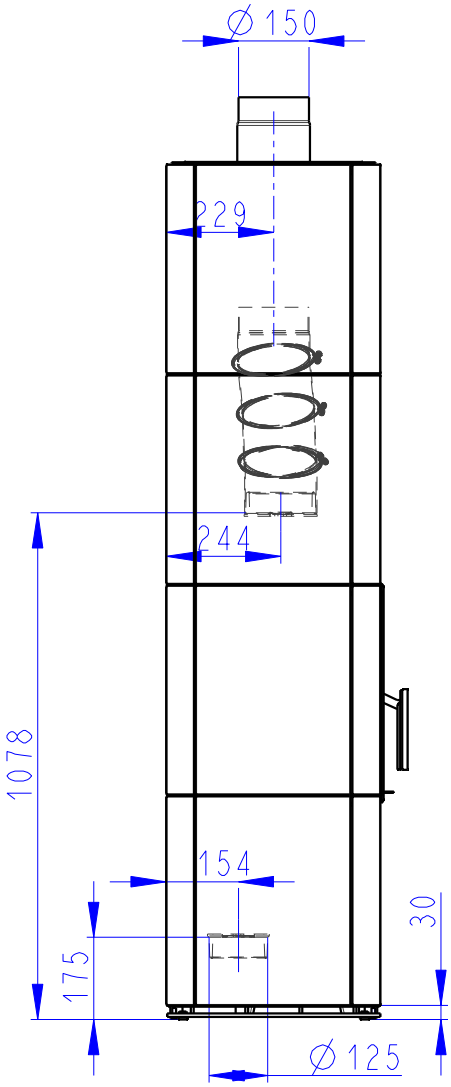

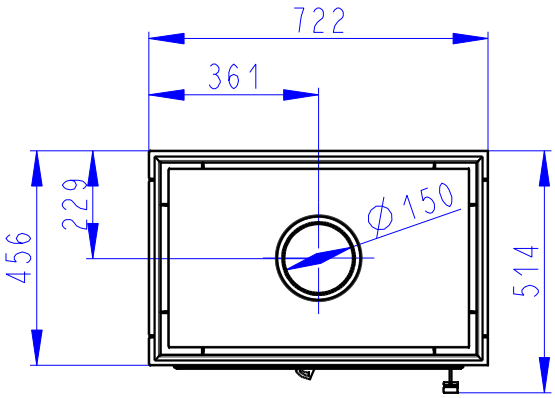

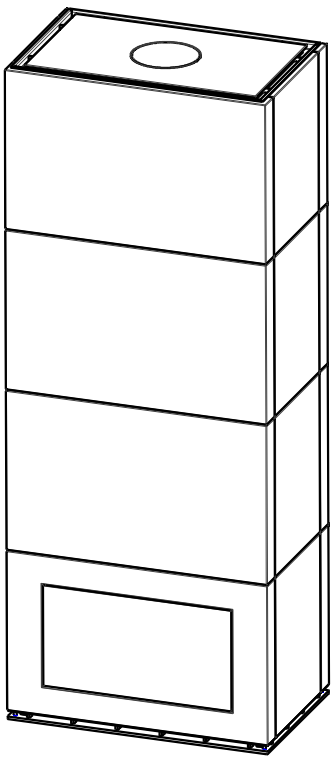

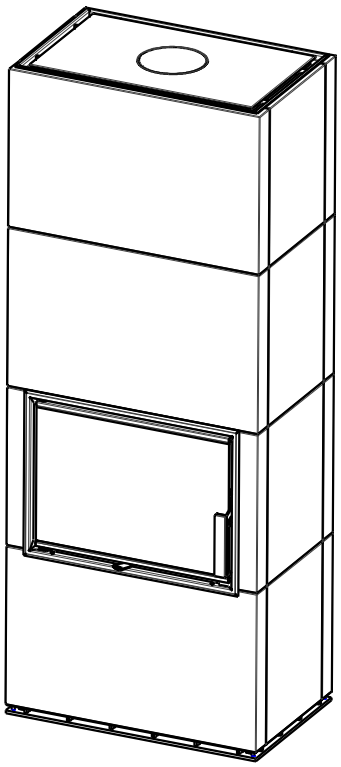

Romotop® SOLID F A

KERAMIKA
KERAMIK
CERAMIC

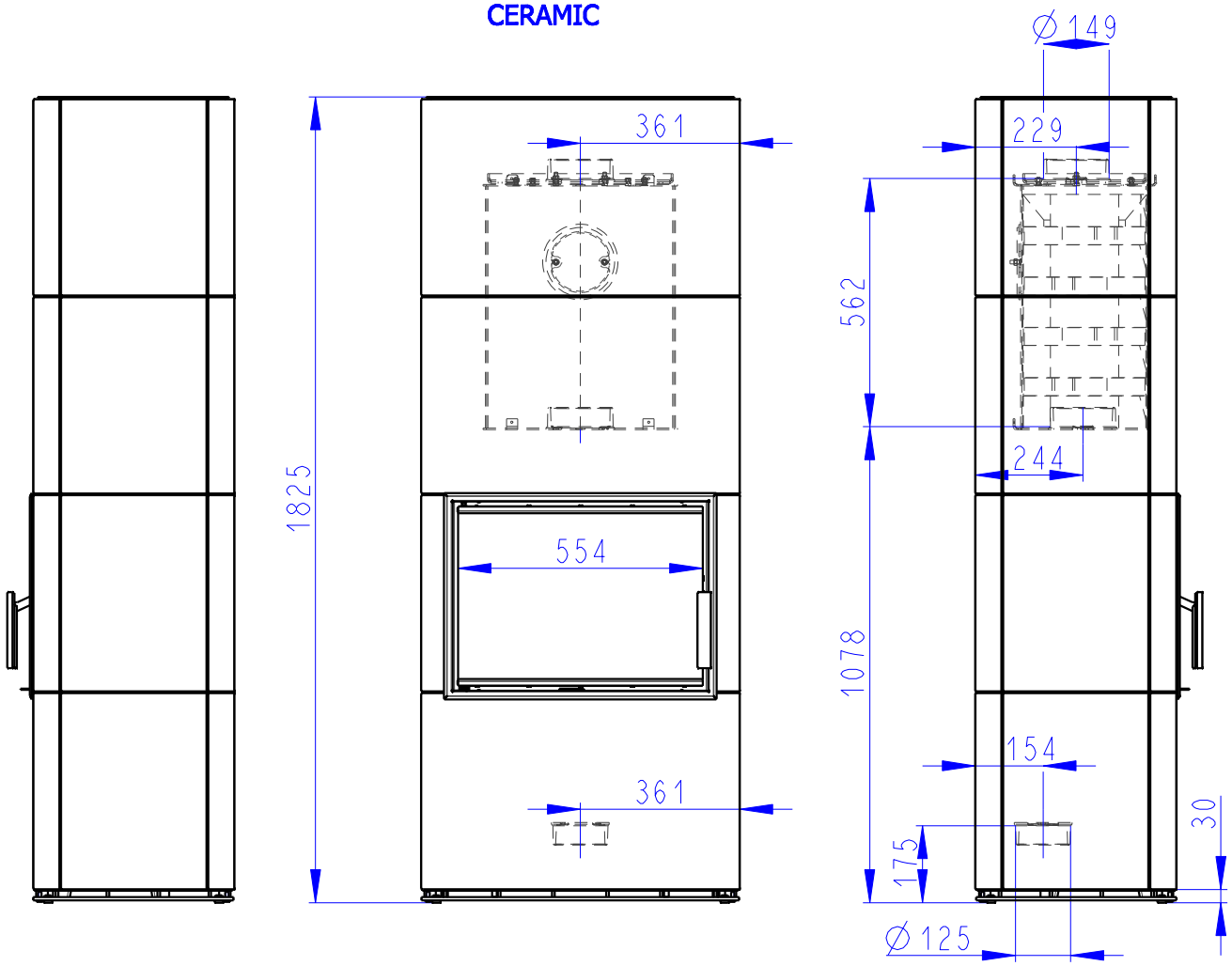

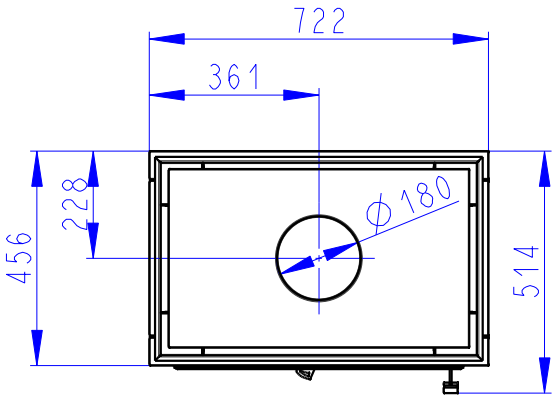

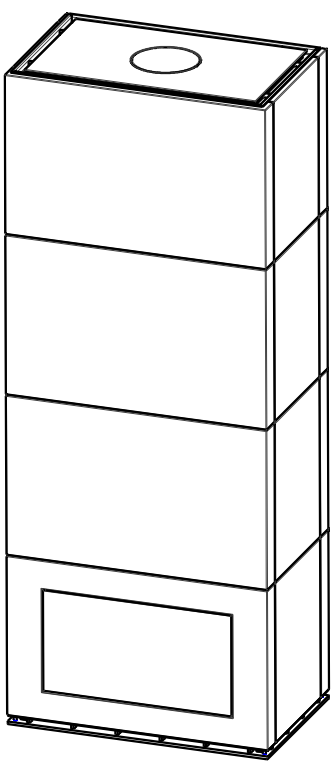

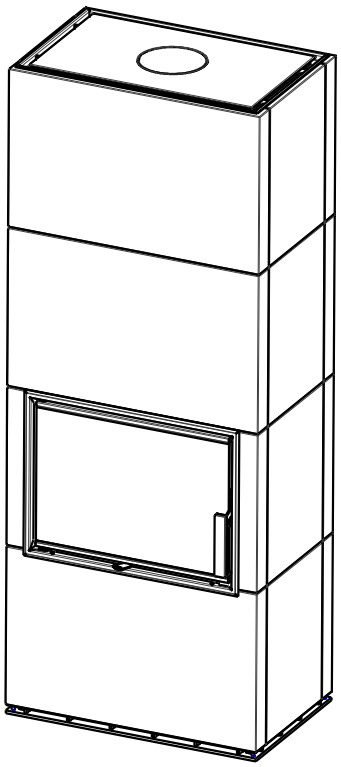

Romotop®

SOLID F A Z
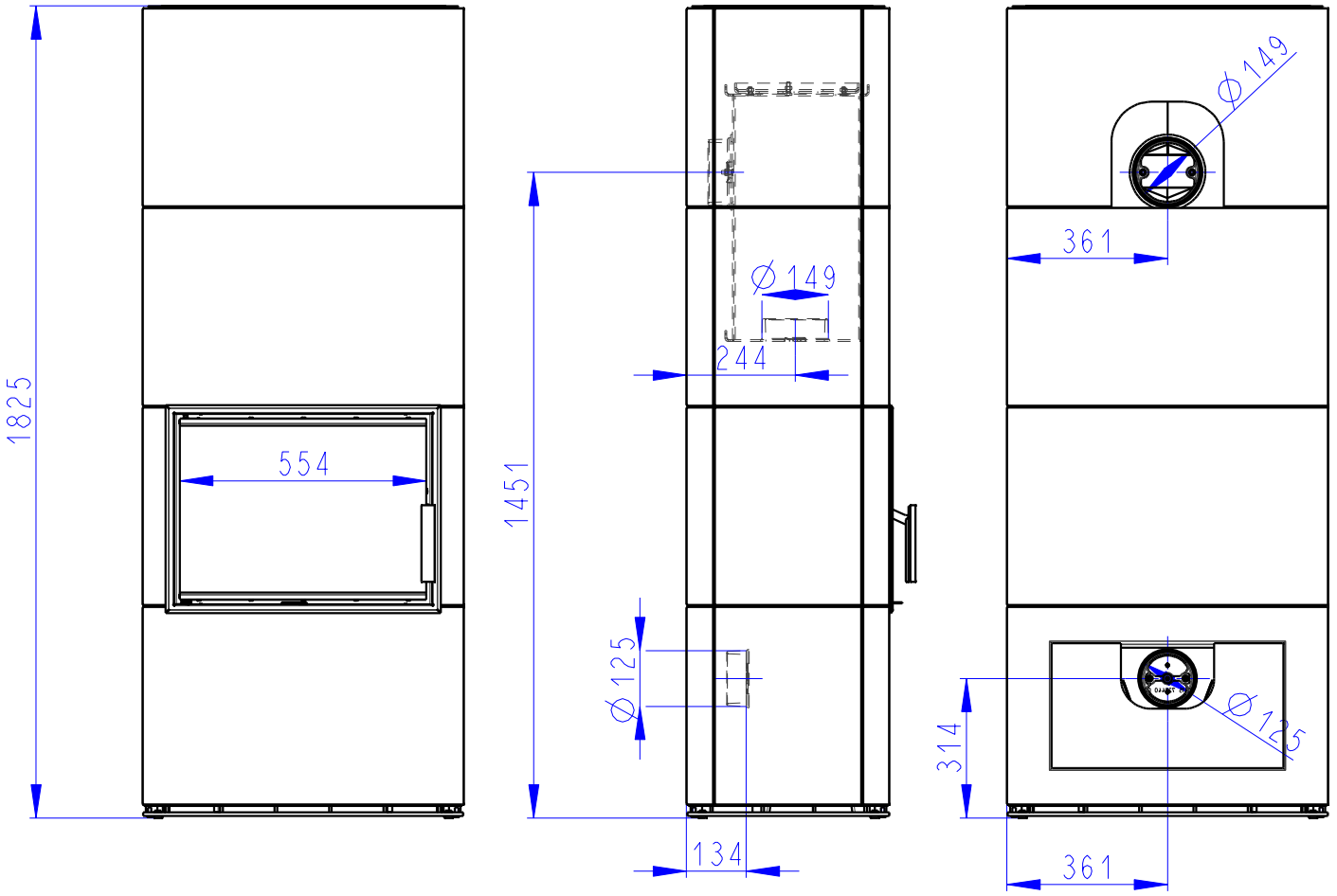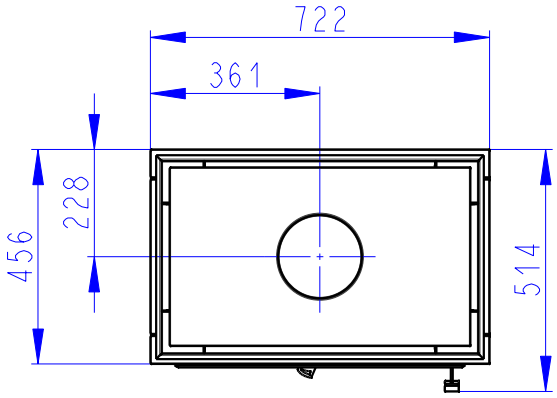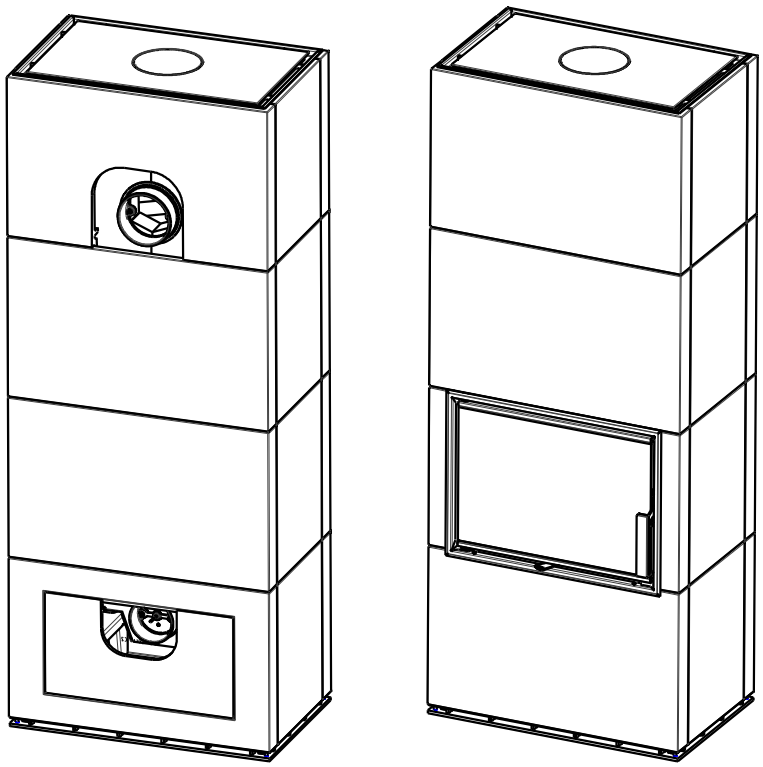
KERAMIKA
KERAMIK
CERAMIC